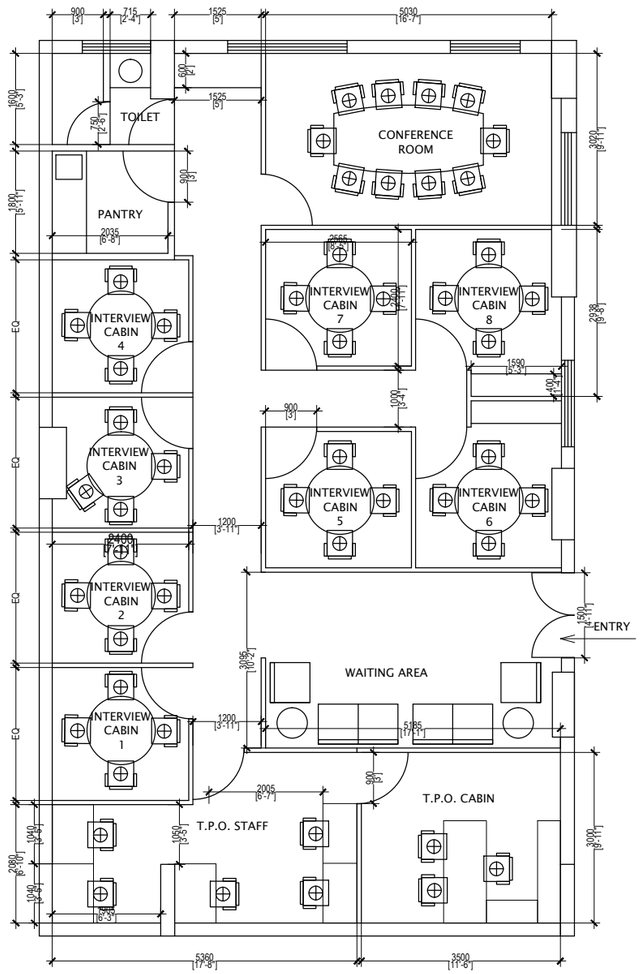

TRAINING & PLACEMENT OFFICE

ROOM 104

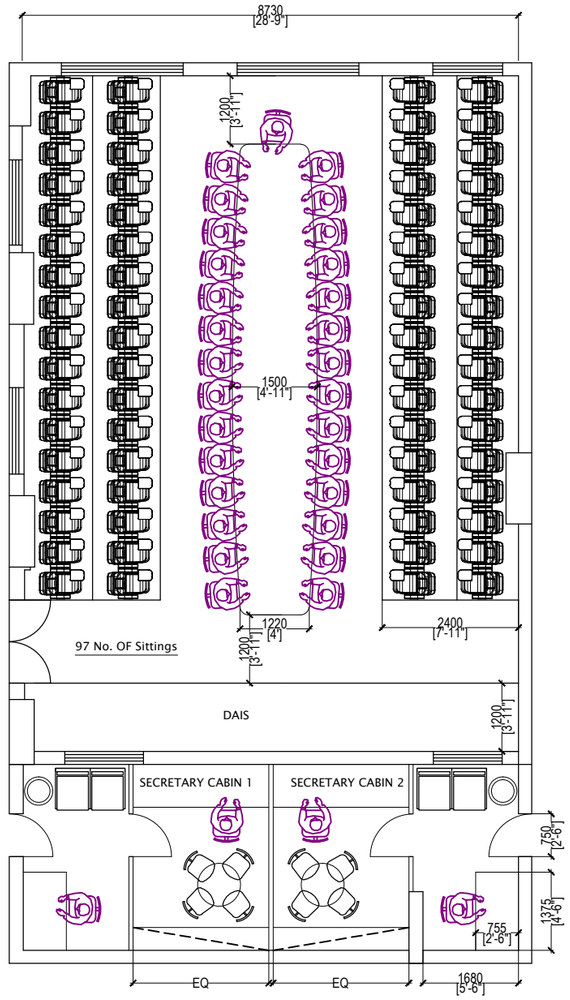

CONFERENCE HALL

105

WORKING DRAWINGS

NO.	DESCRIPTION	DATE	DRAWN BY

REVISIONS

DATE	DRG. NO.	REV. NO.	NO. OF PRINTS

DISTRIBUTION OF PRINTS

General Notes

NOTE:-

DATE	19-12-2023
DATE	1:100
DRAWN	CK
CHECK	PP
APPROVED	PP
SHEET SIZE	A3- 420 mm x 297 mm

CLIENT

SPIT

PROJECT

INTERIOR DESIGN FOR SPIT.

DESIGN IDEAS

2, SREE RANG BUILDING, GROUND FLOOR,
CHANDAVARKAR ROAD, OPP BANK OF BARODA,
CENTRAL MATUNGA, MUMBAI-19
TELE : 24118778,24131712

NORTH

SHEET TITLE

T.P.O. OFFICE & CONFERENCE HALL

PROJECT NO.

DWG. NO.

DI/INT/SPIT/SEM/01

REV. NO.

R-1